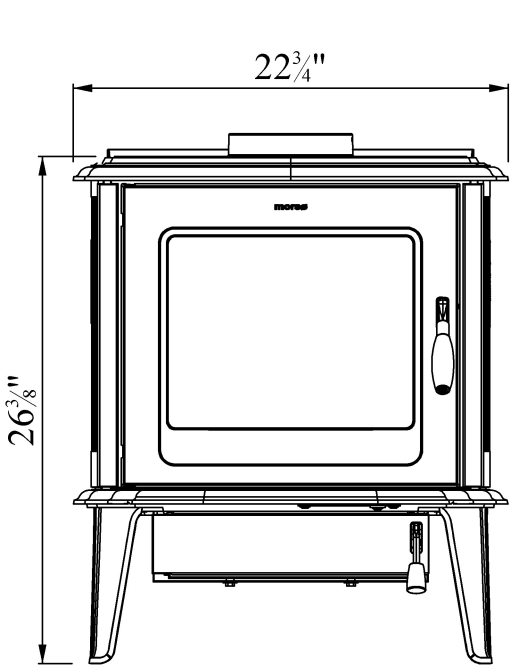

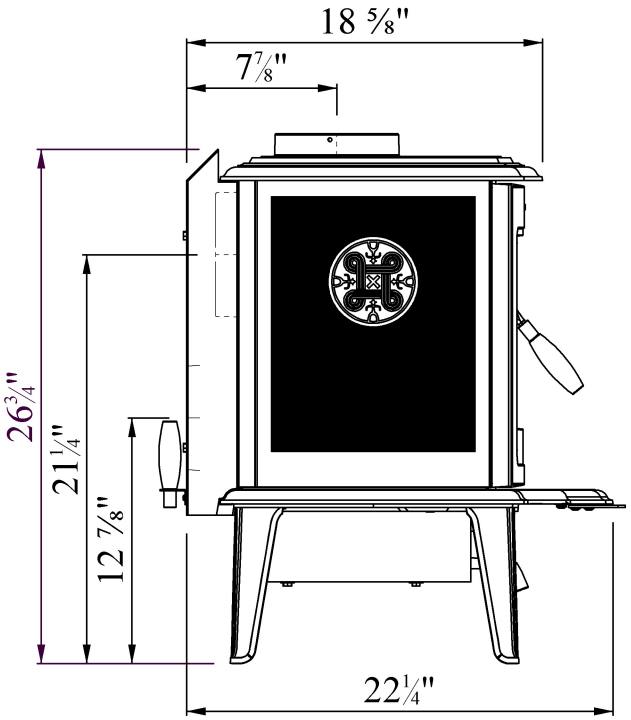

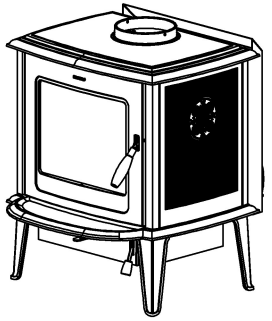

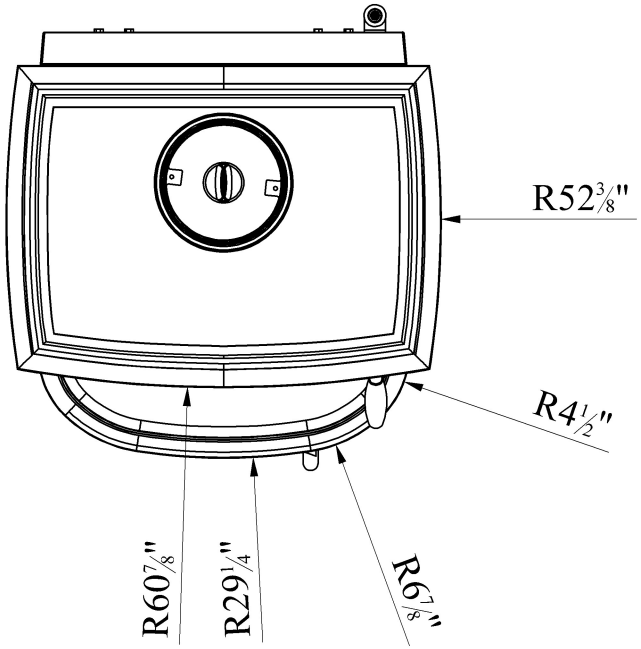

Rev.	Revisions	Sign.:	Date:

Material:		Title: Målskitse 7110 USA korte ben Morsø 7110	Construction: KDU 19.08.03
Weight kg.:			Released:
Model no.	-		Format: A2
Drawingtype:	Målskitse		Scale: 1:5
Location of file:	U:\udv\Tegningen\7100\7110 Sandling\SLDASM		Itemno.:
		morsø	Drawing no.: 7100-42 a

This drawing is Morsø Jernstøberi A/S' property and must not be sold, lended or copied without any written authorization from the company.

Date of print: 16-03-2011